Mechanics (ME1L001) **Tutorial Sheet 3**

29 March, 2023

Prob. 1: Each suspended weight has mass m =20 kg. Using the method of joints, determine the axial forces in the members of the truss and indicate whether they are in tension (T) or compression (C).

[Ans: T_{AB} = 423 N (C), T_{AC} = 211 N (T), T_{AD} = 306 N (T), T_{BC} = 314 N(C), T_{CD} = 235 N (C)]

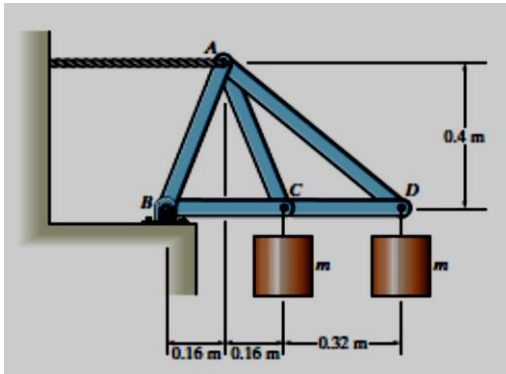

Prob. 2: Using the method of joints, determine the force in each member of the truss shown. State whether each member is in tension or compression.

[F_{AD} = F_{AC} = 10 kN (C), F_{AE} = F_{AB} = 6.71 kN (T), F_{DE} = F_{BC} = 6 kN (C)]

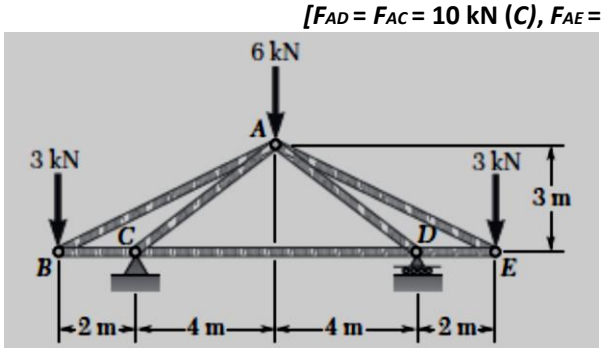

Prob. 3: Using the method of joints, determine the force in each member of the truss shown. State whether each member is in tension or compression.

(Ans: F AB =128.0 kN T ; F AC = 136.7 kN C ; F BD =F DF= F FH = 128.0 kN T ; F CE = F EG =136.7 kN C ; F GH =192.7 kN C .)

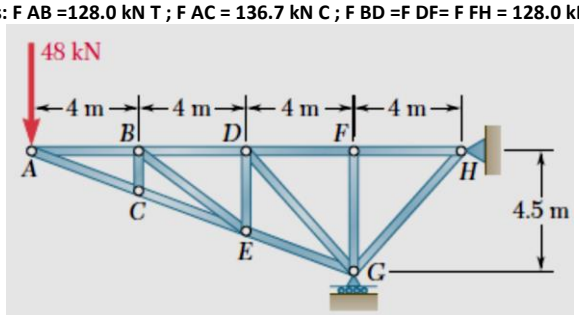

Prob. 4: Solve for the forces in members BE and BD of the truss which supports the load L. All interior angles are 60° or 120°. (Ans: BE=L T, BD=L C)

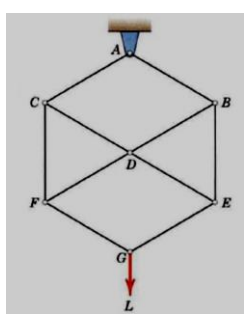

Prob. 5: Determine the force in each member of the loaded truss shown in Figure (a) and (b).

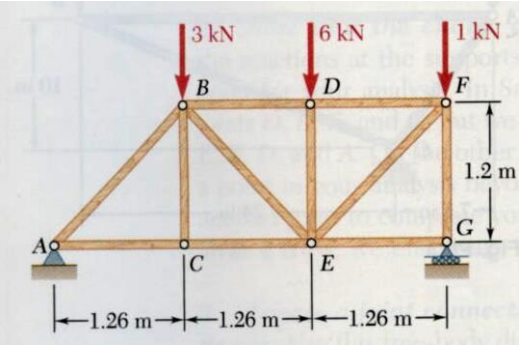

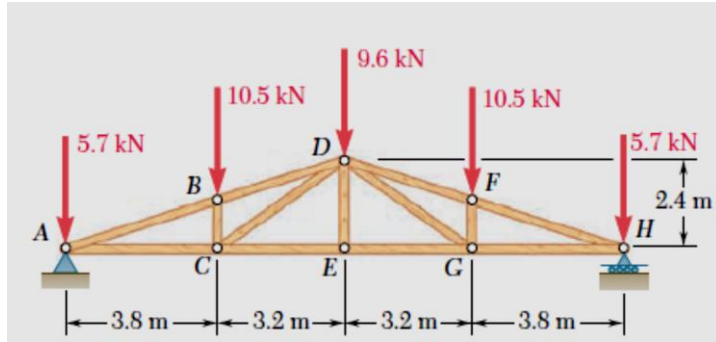

(a) **(b)**

Prob. 6: Calculate the forces in members BC, BE and EF. Solve for each force from an equilibrium equation which contains that force as the only unknown. (Ans: BC=21kN T, BE=8.41 kN T, EF=29.5kN C)

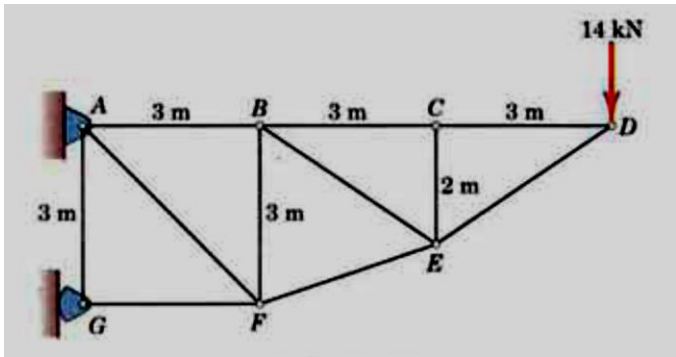

Prob. 7: A Warren bridge truss is loaded as shown. Determine the force in members CE, DE, and DF.

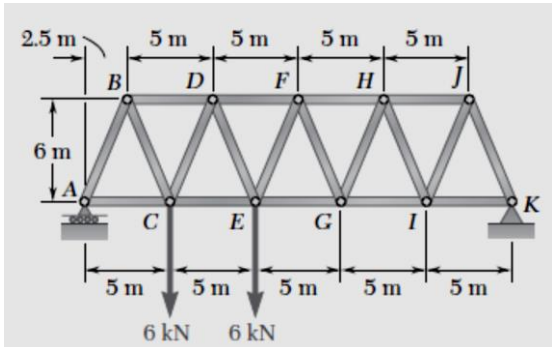

Prob. 8: For the given loading, determine the zero-force members in the truss shown in Figure (c) & (d).

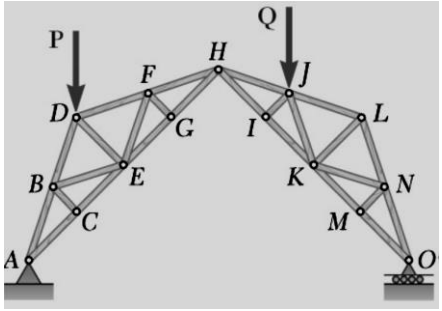

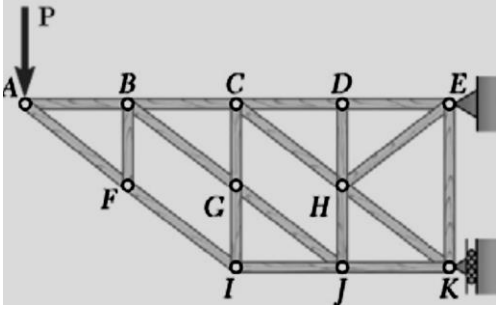

(c) **(d)**

Prob. 9: The ramp is used as passengers board a small commuter airplane. The total mass of the ramp and six passengers is 750 kg with mass center at G. Determine the force in the hydraulic cylinder AB and the magnitude of the pin reaction at C. (Ans: F_{AB}=5310N, N=4670N)

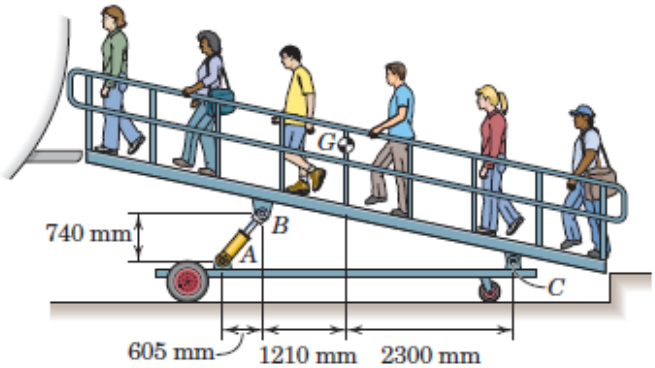
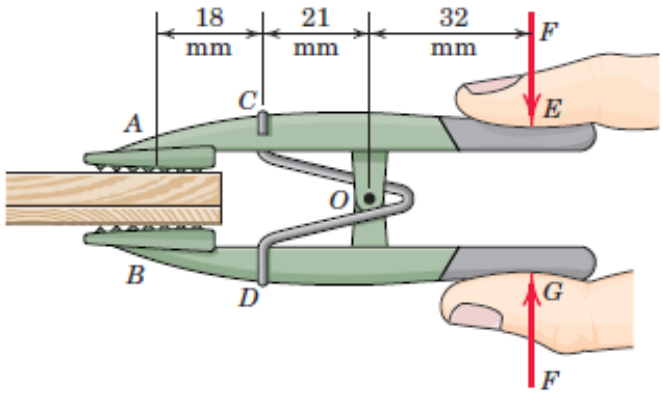
Prob. 10: If a force F _ 15 N is required to release the spring-loaded clamps, what are the normal reactions at A and B if F _ 0? (Ans: C=22.9N, A=12.13N)